October 11-13, 2006 • San Diego Convention Center, San Diego, CA

IP Multimedia Subsystems: A Tutorial

C.V. Chakravarthy
EMBARQ Corporation
Overland Park, Kansas
Cadathur.Chakravarthy@Embarq.com

www.imsexpo.com

Agenda

- Definition of IMS
  - Features & Benefits
  - Standards Support & Timeline
  - Architecture
  - Elements of Core IMS
- IPv6 requirements for IMS
- IMS and Service Delivery Platforms (SDP)
- IMS for wire-line carriers
- References

What is IMS

- What is IP Multimedia Subsystem (IMS)?
- An Architecture for real time multimedia (Voice, Data , Video and Messaging) services using a common IP network. It defines a layered architecture
- Relies solely on SIP as the primary Session Control Protocol (Some interfaces may use H.248 etc.)
- Developed initially by the 3GPP (GSM community) standards group.
- The core IMS elements use IP only.
- The original 3GPP specification assumed a wireless access network and mandated the use of IPv6 alone (because of the number of end points that must have IP addresses)

What is IMS

- Later releases relaxed this requirements to include IPv4, though the ultimate goal is to still use only IPv6.
- Other organizations adopted the IMS design with slight modifications.
  - 3GPP2, European Telecommunications Standards Institute (ETSI)'s Telecoms and Internet converged Services & Protocols for Advanced Networks (TISPAN) group, Alliance for telecommunications Industries Solutions (ATIS), Packet Cable , Open Mobile Alliance to name the major efforts.
- TISPAN laid emphasis on the need to support wire-line in addition to wireless access.
- 3GPP releases now are access agnostic i.e. not confined to wireless access alone.

What is IMS

- The intelligence is pushed to the end device making it easier to create new services.
- Is IMS absolutely necessary ?
  - No. Most of the services can be offered without IMS.
  - However using IMS may make the process less expensive, shortens the deployment time frame.
  - Much easier to have 3rd party developed applications to be offered.
  - Next Generation services like Fixed/Mobile convergence are much easier with IMS.
  - Initial outlay will be expensive, especially in the transition period, requiring Media gateways, Signaling gateways etc.

IMS Requirements

- 3GPP TS 22.228
  - High-level requirements
    - Negotiable QoS for IP multimedia applications
  - At session establishment and during session
    - End-to-end QoS for voice
  - A quality equal to or better than that of mobile CS voice call
  - Roaming
    - Inter-operator QoS negotiation
    - Use services provided by home- and by serving network
- Mandatory default set of media types to ensure interoperability
  - Codec (audio: AMR, video: H.263), header compression
  - Access independence (GPRS, fixed, LAN)
  - Support for session-oriented non-3GPP Internet apps

Pros

- Transport, Control & Applications are separated into independent layers
- Access agnostic.
- Same application runs over many different infrastructures
- Deploy real-time applications to be deployed along with ensuring QoS, customized billing, using SIP as the main signaling protocol.
- Quicker & cheaper to enable new applications

Cons

- Complex Service Delivery in IMS
- Significant Capital outlay for the Service Provider (The expectation is that this is offset by the efficiencies & speed to market)
- Diverse Access technologies: xDSL, Radio Network etc.
- SIP does not currently support Gaming, Video on Demand, IPTV etc.
- Interconnection among layers (Network, service) is not easy to manage
- Billing is complex

3GPP Time Line

- Pre IMS Releases
  - Release 99 March 2000
  - Release 4 Q2 2001
- IMS Releases
  - Release 5 March-June 2002
  - Release 6 3Q 2005
  - Release 7 (Various Specs being released in 2006)

Support for IMS from other Bodies

- 3GPP2 (CDMA community) - 3rd Generation Partnership Project 2
  - 3GPP defined the IP Multimedia Subsystem (IMS)
  - 3GPP2 defines almost that same architecture but calls it Multimedia Domain (MMD).
- OMA - Open Mobile Alliance
  - Defining services for IMS architecture, e.g. Instant Messaging, Push-to-Talk
- ETSI -
  - TISPAN Release 1 is an architecture similar to IMS, but specifically includes support for Non-SIP based applications (e.g. Gaming, P2P applications, IPTV, VoD etc.)

IMS Support

- ITU - International Telecommunication Union
  - Defines many of the protocols used by IMS
  - H.248 for media control
  - Q.1912.SIP for SIP – ISUP inter-working (in conjunction with IETF)
- ATIS - Alliance for Telecommunications Industry Solutions
  - Addressing end-to-end solutions over wire-line and wireless
  - Nearing agreement to use 3GPP/3GPP2 IMS
- Packet cable –Support for IMS from Packet Cable 2.0 onwards

IMS-NGN Timeline

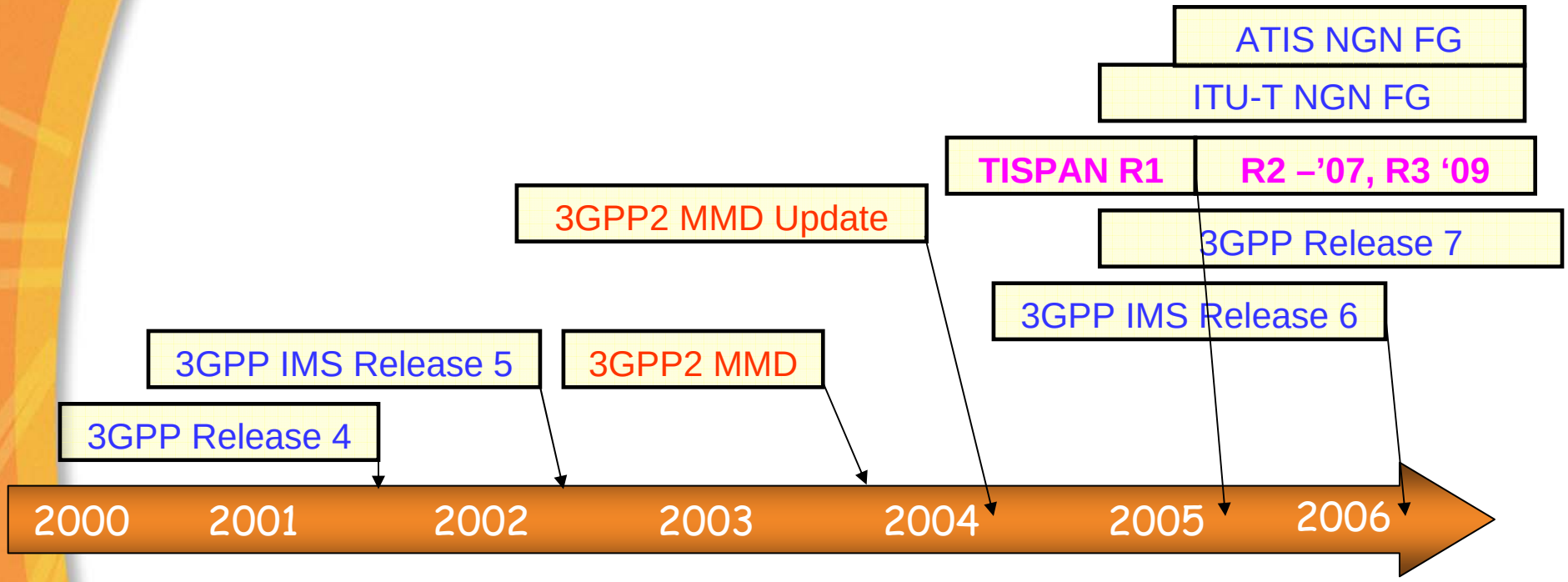

IMS Architecture

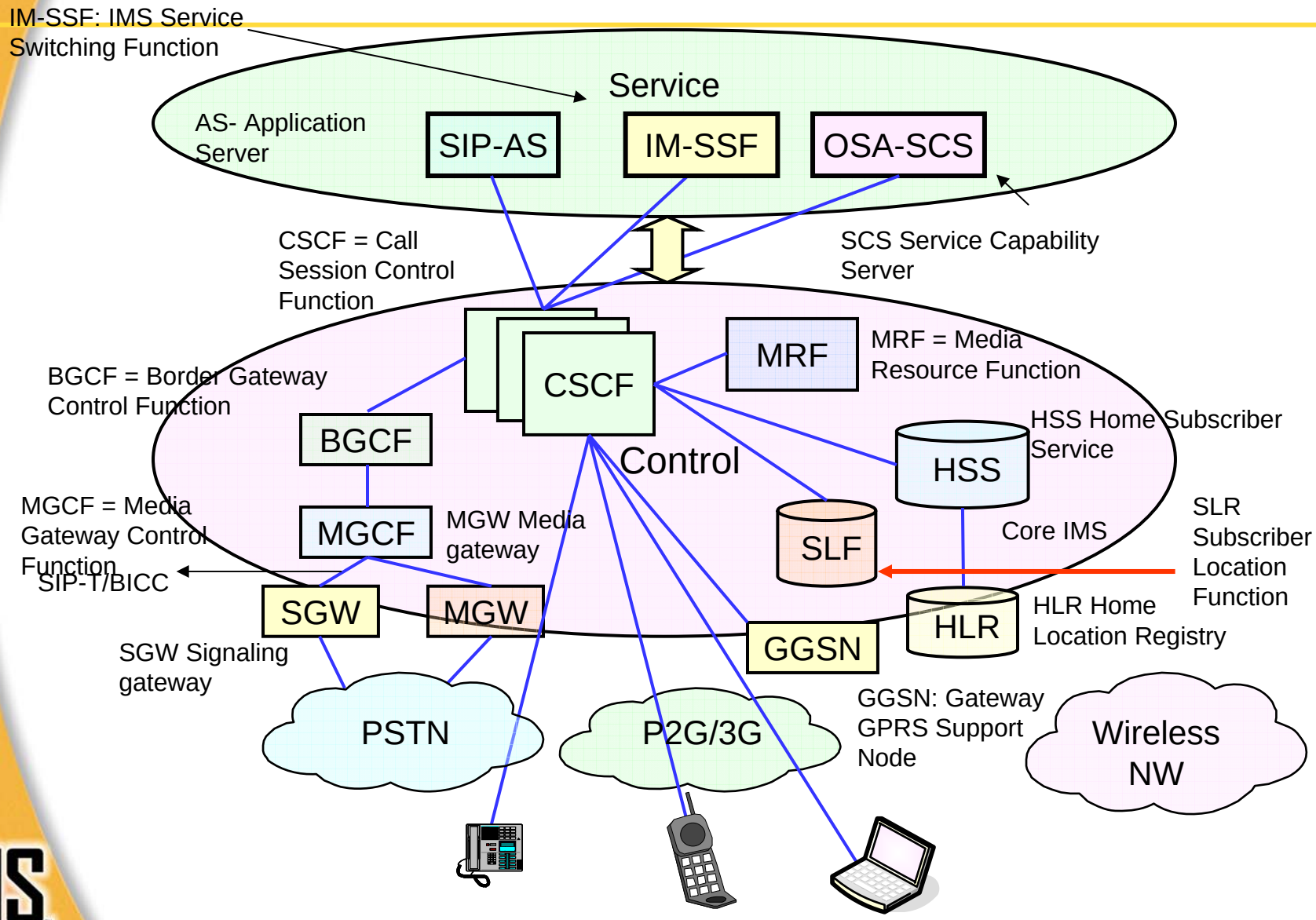

3GPP/TISPAN IMS architecture

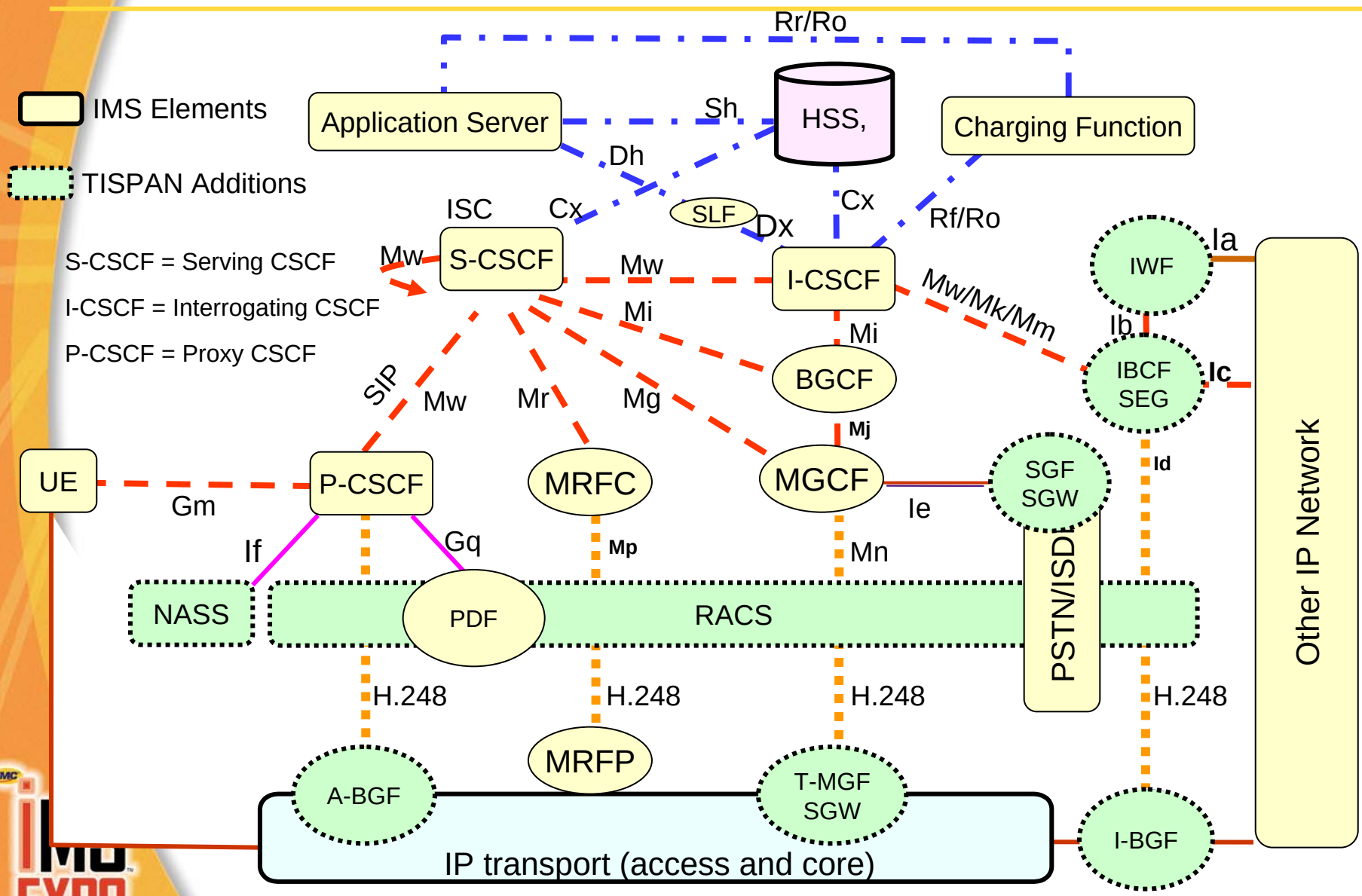

Convergence as it is today

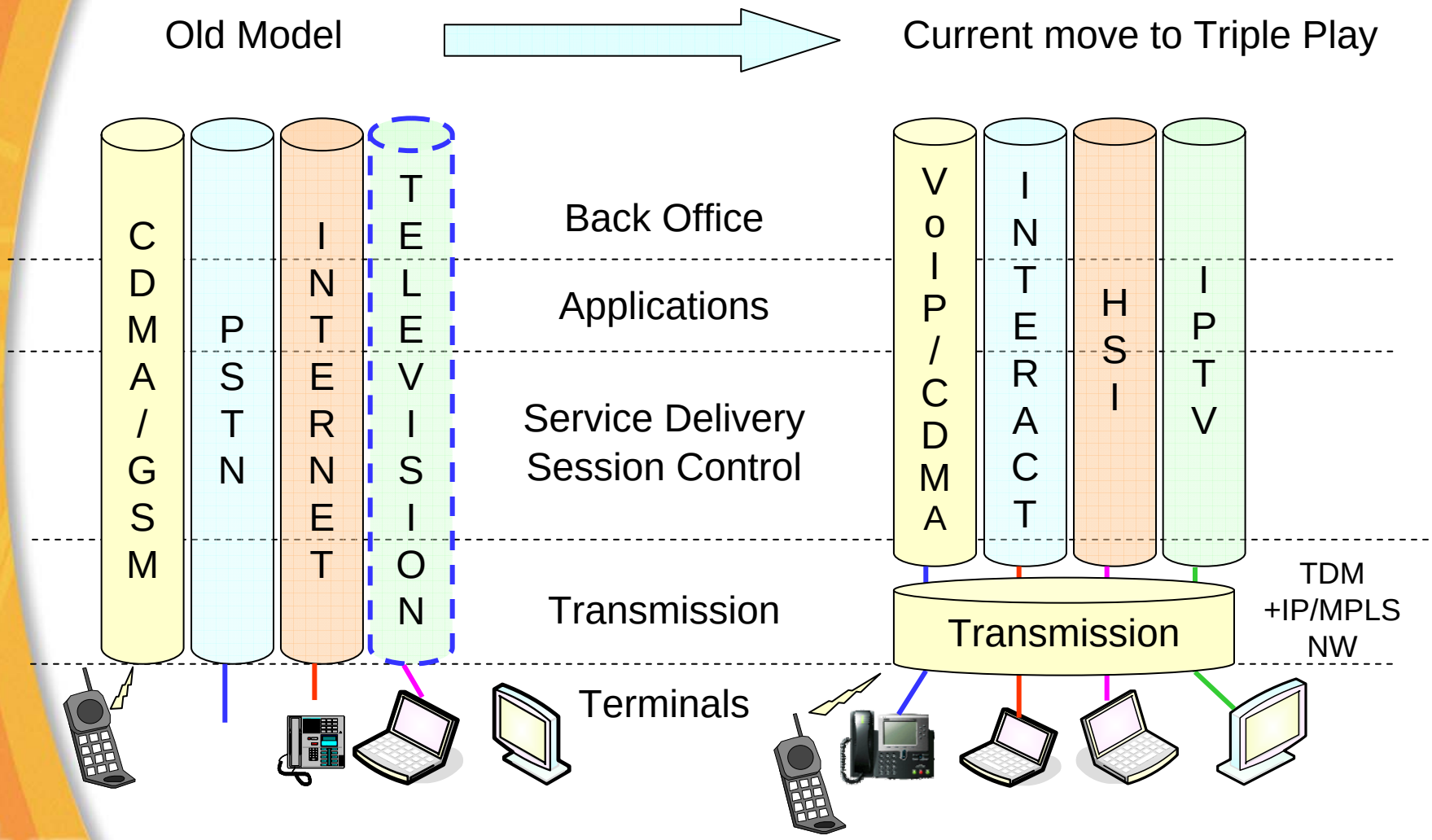

Pure IMS Vision

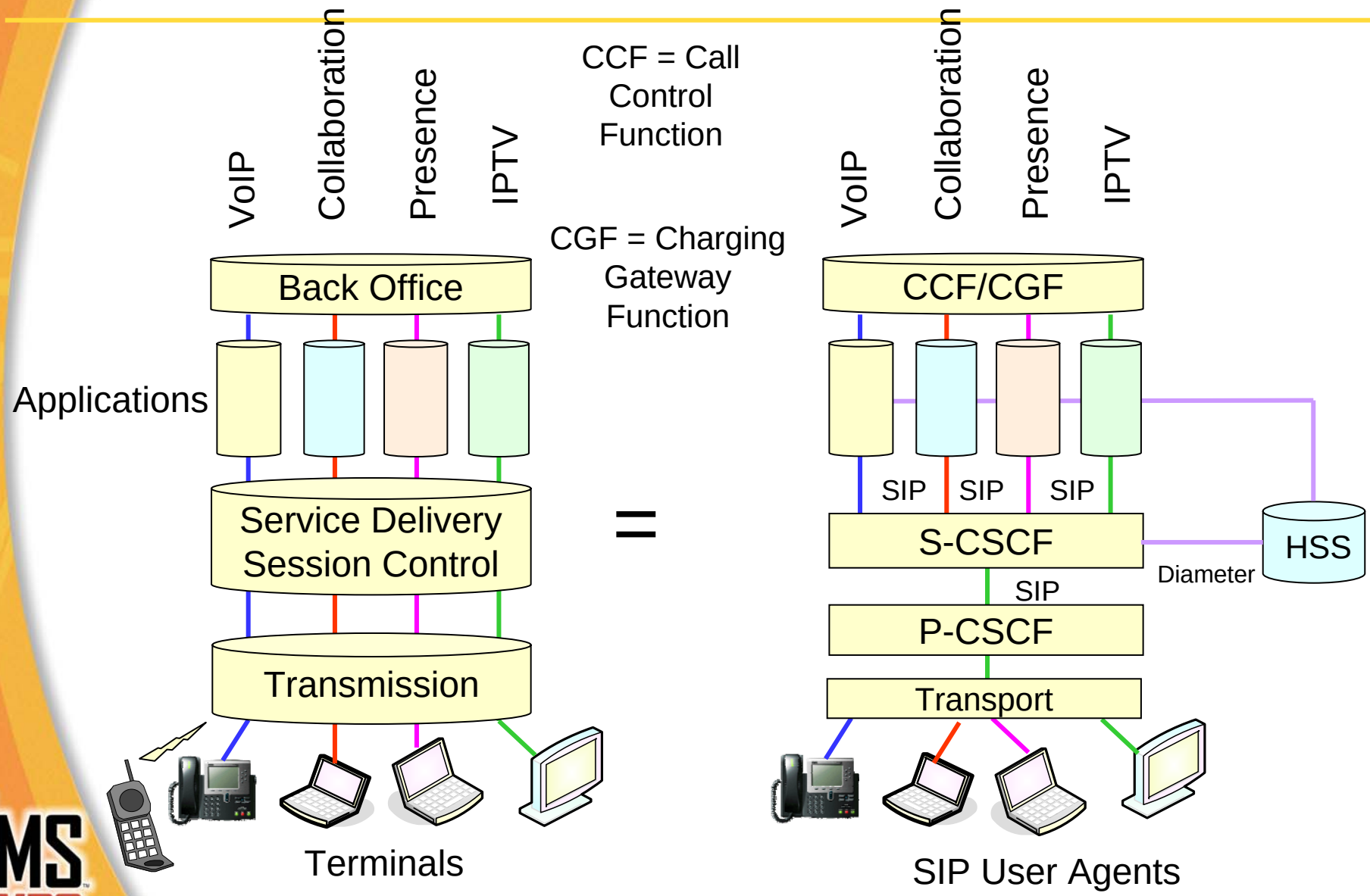

Major Protocols used in IMS

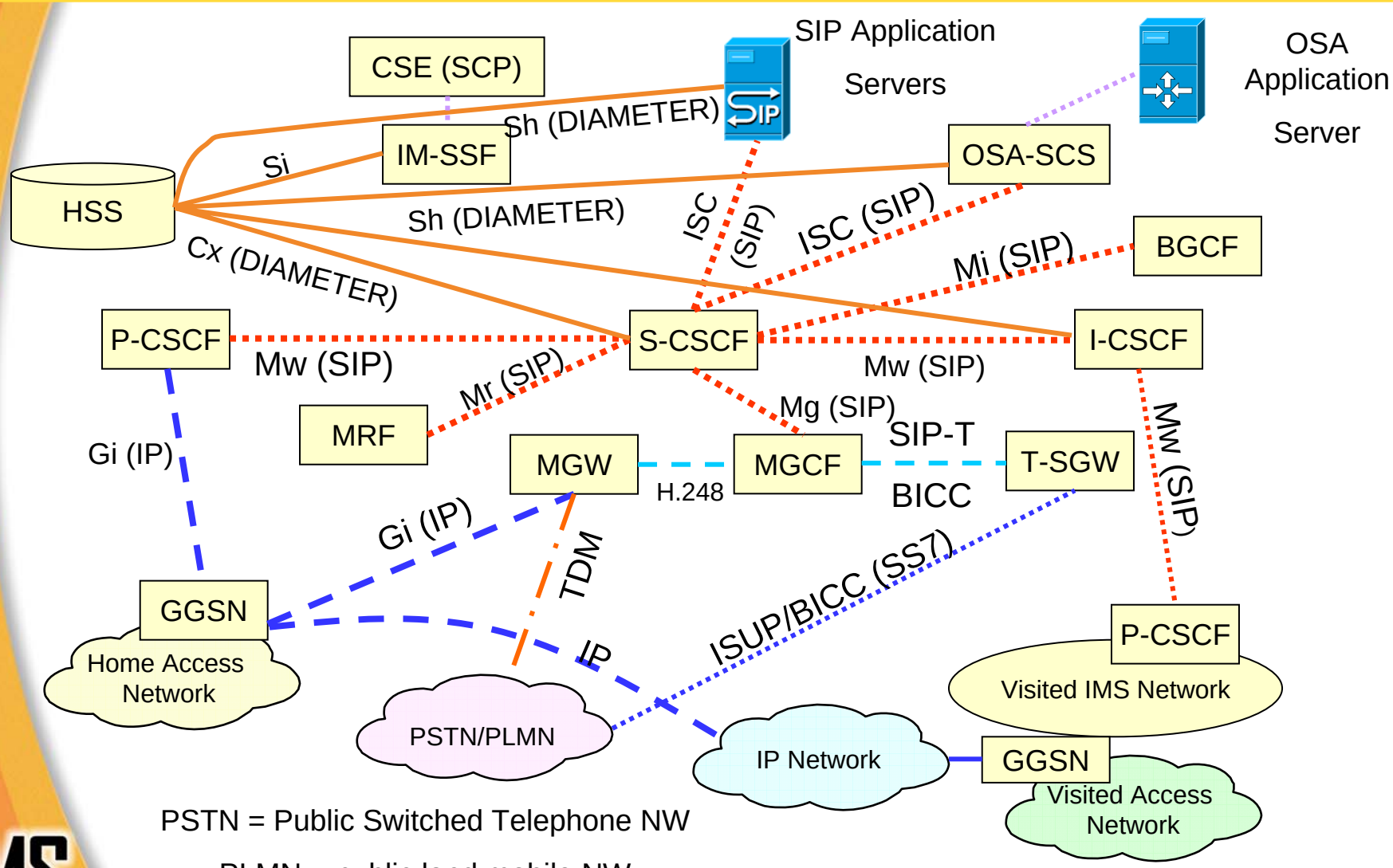

PSTN = Public Switched Telephone NW

PLMN = public land mobile NW

IPv6 Support

- Originally IMS mandated IPv6 only (IMS Release 5)
  - However all end points & network elements are mostly IPv4
  - So requirements relaxed to include IPv4 (Release 6)
  - Still the goal is for IPv6 only and this is consistent with the need for end to end operation (Public or private) without NAT
- Some form of IPv4/IPv6 inter-working will be necessary, if possible without compromising end to end security.

IPv6 Support

- IMS nodes must support IPv6
- GGSN (Gateway GPRS Support Node) must run IPv6 on its Gi interface
- SGSN (Serving GPRS Support Node) modifications necessary to store IPv6 addresses
- RNC may need to support IPv6 header compression
- IPv6 packets can be tunneled through access network using IPv4
- Capability for inter-working IPv6 and IPv4 critical

IPv6 requirements

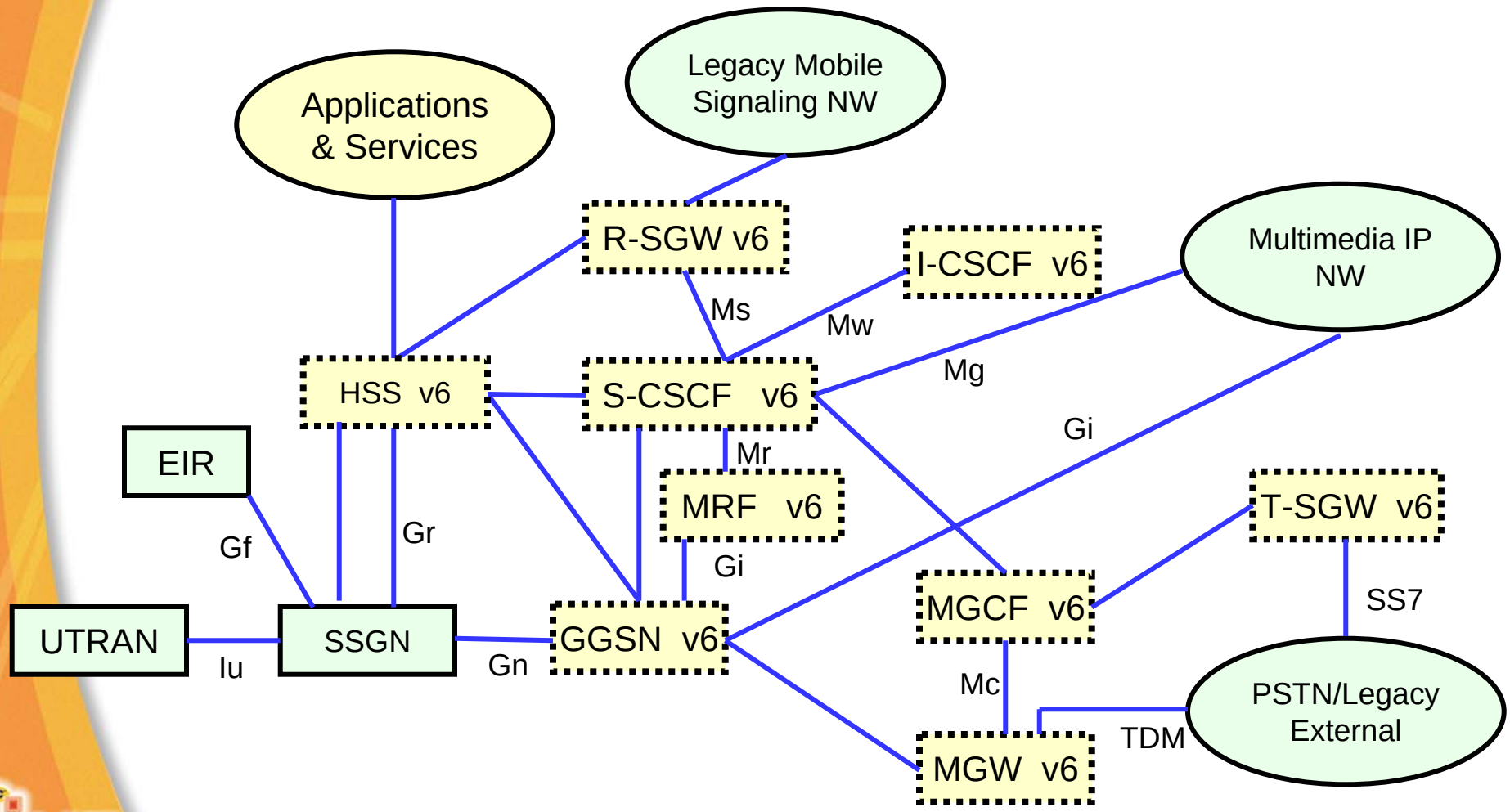

IMS with Minimum IPv6 support

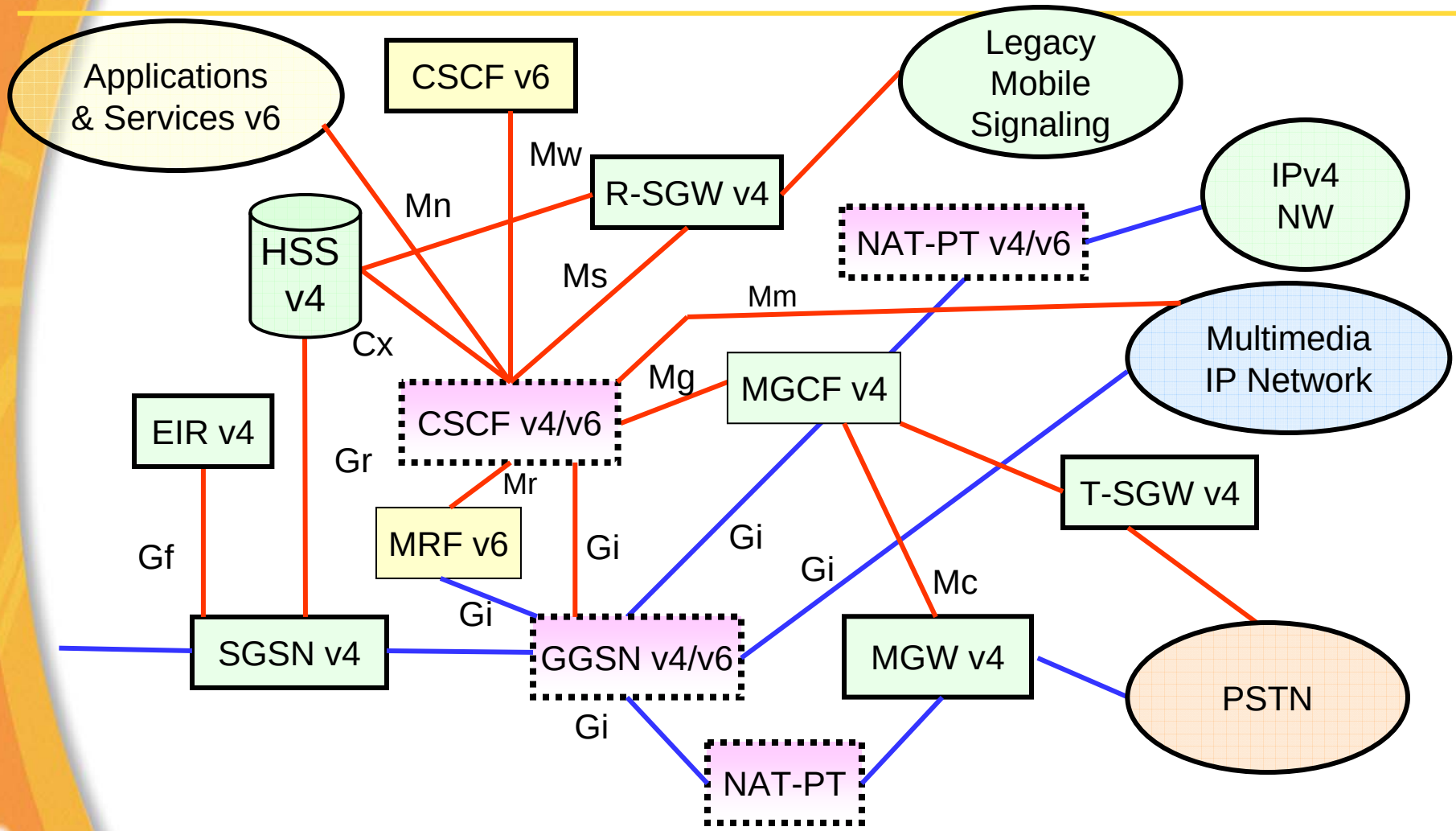

IPv6 in IMS

- Introduction of SIP-based peer-to-peer services is an important step after current client-server based services.
- IP Multimedia Subsystem (IMS) is a service infrastructure based on the use of Session Initiation Protocol (SIP).
  - 3GPP Release 5 and 6 specifications
  - 3GPP2 specifications
- In order to make peer-to-peer services work between different operators' networks, IPv6 is needed - peer-to-peer services work well only with public IP addresses.
  - Small scale IMS deployment / piloting can be started with IPv4.
  - IPv6 is vital for wider scale, global IMS deployment.

IPv6 in IMS

- Today's Internet is predominantly IPv4-based
- Mobile Multimedia services based on IMS will aim to interoperate with emerging Internet network services (SIP Internet Clients)
- Early IMS Systems will support IPv4
- Other IMS systems will support dual-stack (IPv6 and IPv4)
- IMS will need to support IPv6-IPv4 inter-working

IPv6 in IMS

- The problem seems simpler if one considers inter-working between IPv4-only systems and dual-stack (IPv6 & IPv4) systems
  - IPv4 is always minimum common denominator, no translation
  - Still needs some SIP/SDP features like ALT (and potentially ICE) for mobiles to offer both IPv6 and IPv4 address to peers
- A more complete IPv6-IPv4 inter-working is needed
  - Two main approaches being considered for IPv6 IMS mobile to IPv4 IMS mobile communication:
  - Classical SIP/SDP/IP Header Translation (i.e. a “translator” replacesIPv6 addresses with IPv4 addresses or vice versa)
  - More end-to-end mechanism to enable security

IP version Inter-working

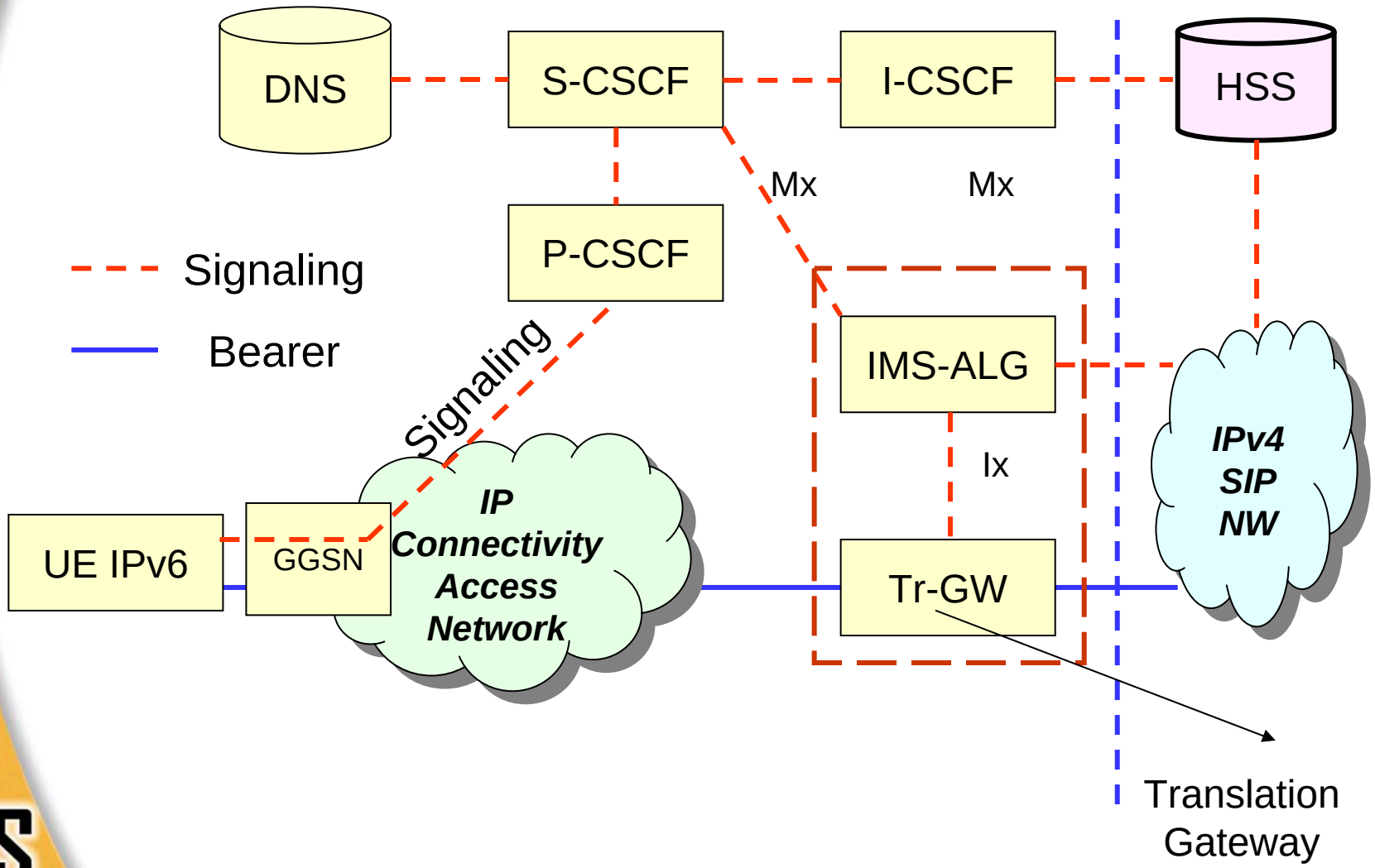

Service Delivery Platform (SDP)

- The SDP is a software architecture that enables rapid deployment of services
- The service provider can plug in various applications into a common management system.
- These can be home grown or supplied by a third party.
  - SDPs exist in some form or other in all Telecomm Services, but are probably dedicated to a specific service.
  - Next generation SDPs support multiple services and enable convergence
  - Microsoft's Connected Services Framework (CSF) An SDP must be capable of supporting any business model.

Traditional SDP Vs Next Gen SDP

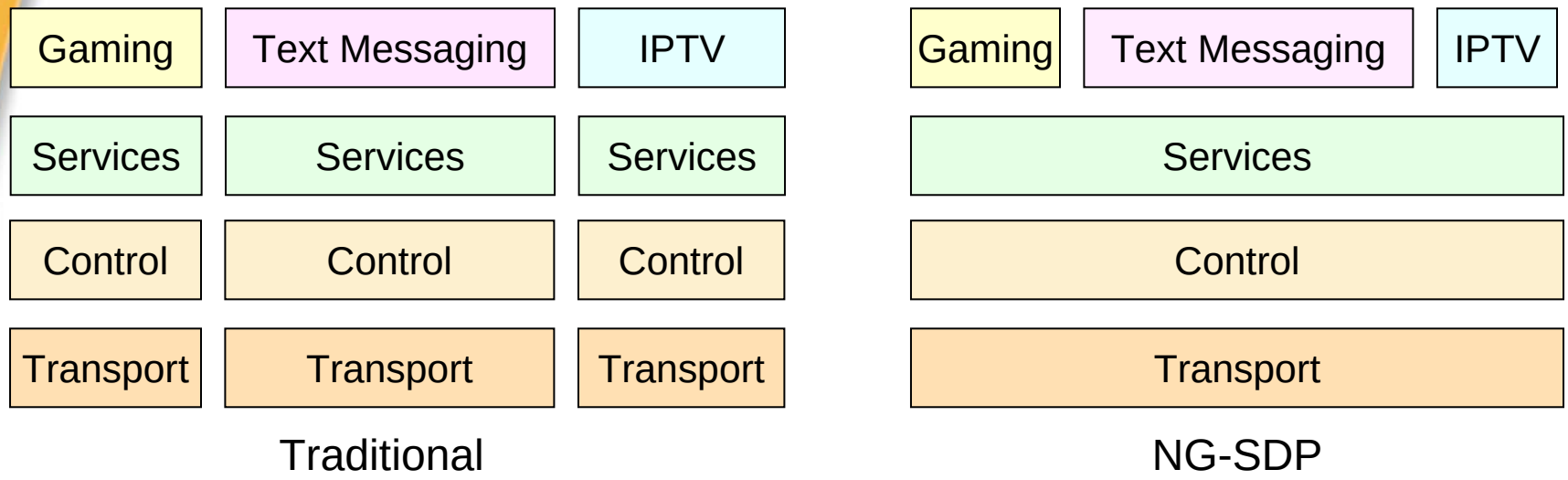

- Horizontal layered model
- Any Service on any Network
- Supports any given business model

Role of an SDP

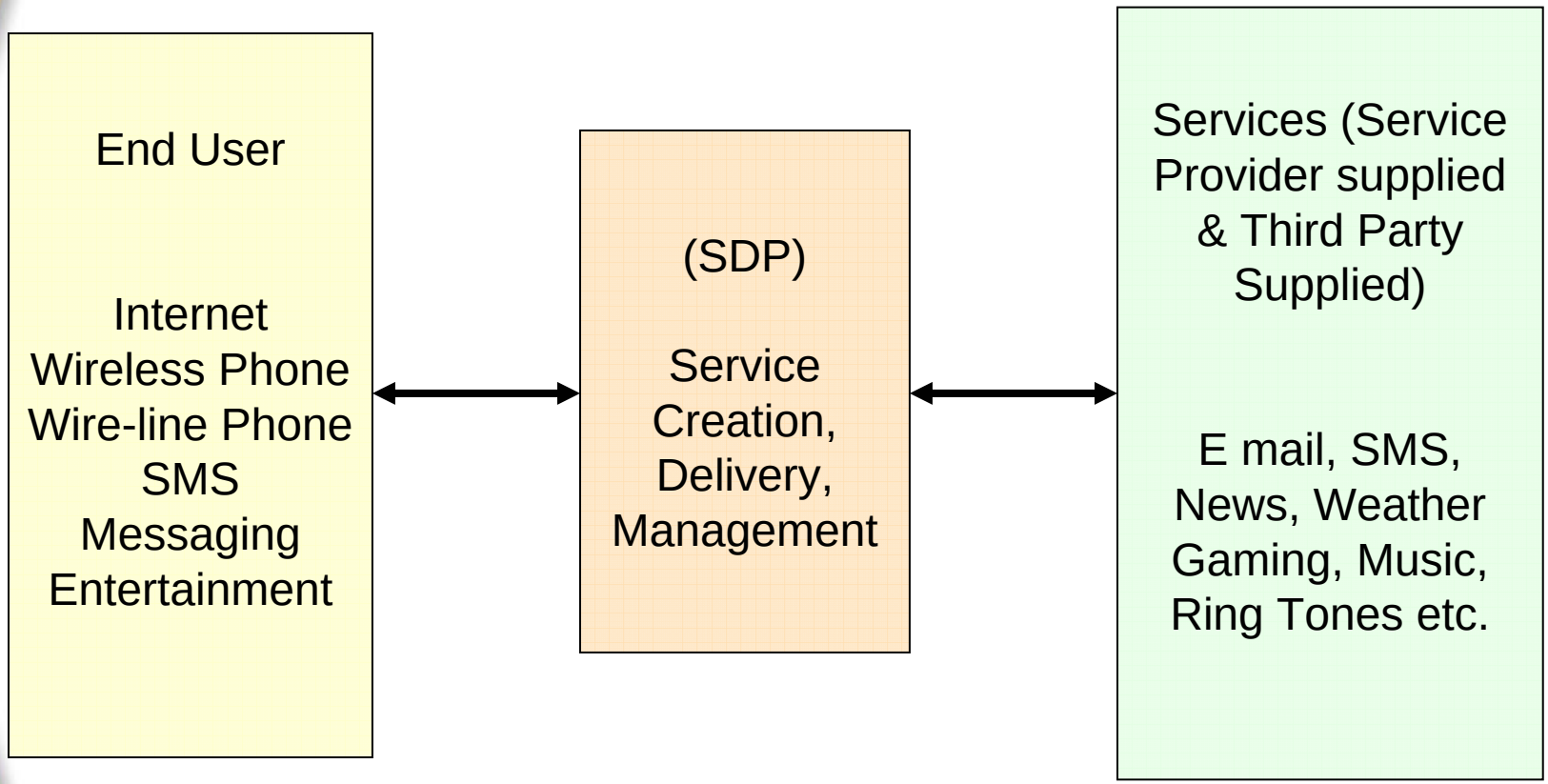

SDP

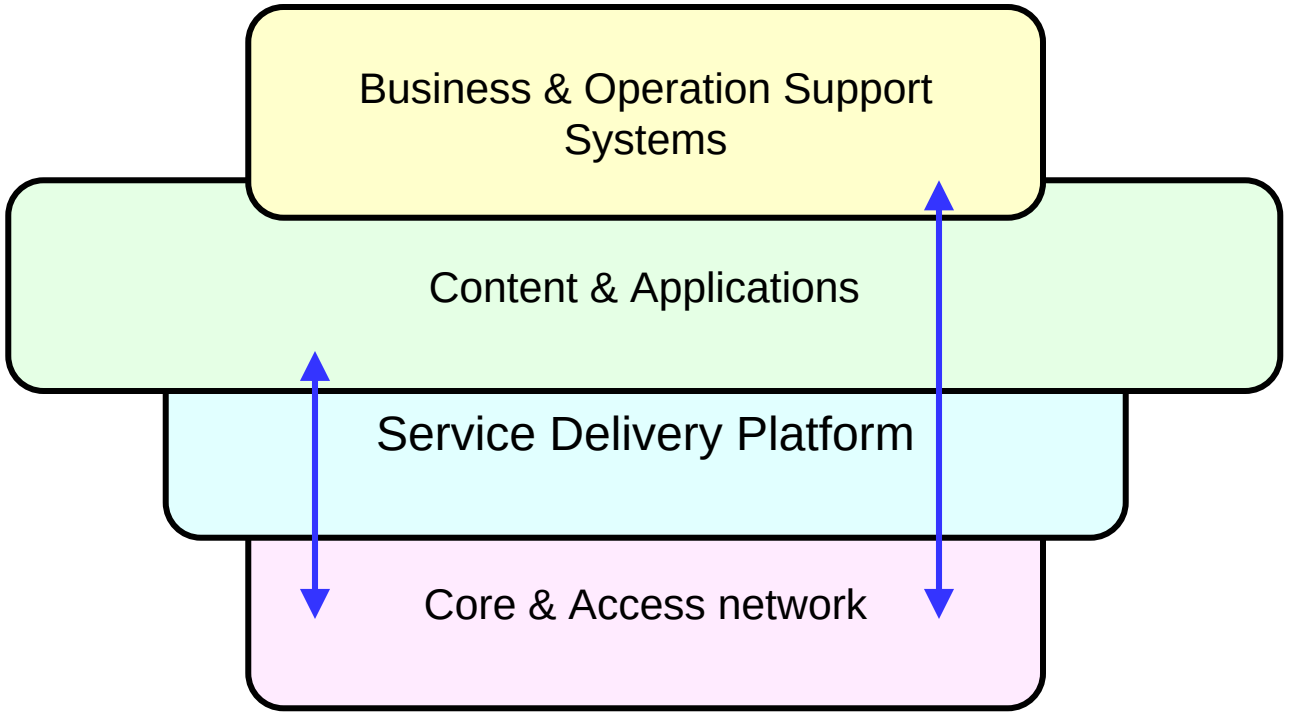
Business & Operation Support Systems
Content & Applications
Service Delivery Platform
Core & Access network

SDP and IMS

- SDP can be used with non IMS (i.e. non-SIP) architectures as well.
- Full fledged IMS and SDP have overlaps.
- IMS architecture promises the same thing as does an SDP i.e. rapid deployment of new services and support for billing etc.
- An operator will most likely deploy an SDP before migrating to full IMS.

SDP and IMS

- In the interim the SDP will enable the co-existence of traditional and new packet based services.
- IMS will reuse the common elements of an SDP like content delivery and the associated interfaces, Billing and management functions, inter-working of legacy & new services.
- Deploying an SDP is just the first step towards a migration to IMS.

IMS for Wire-line Providers

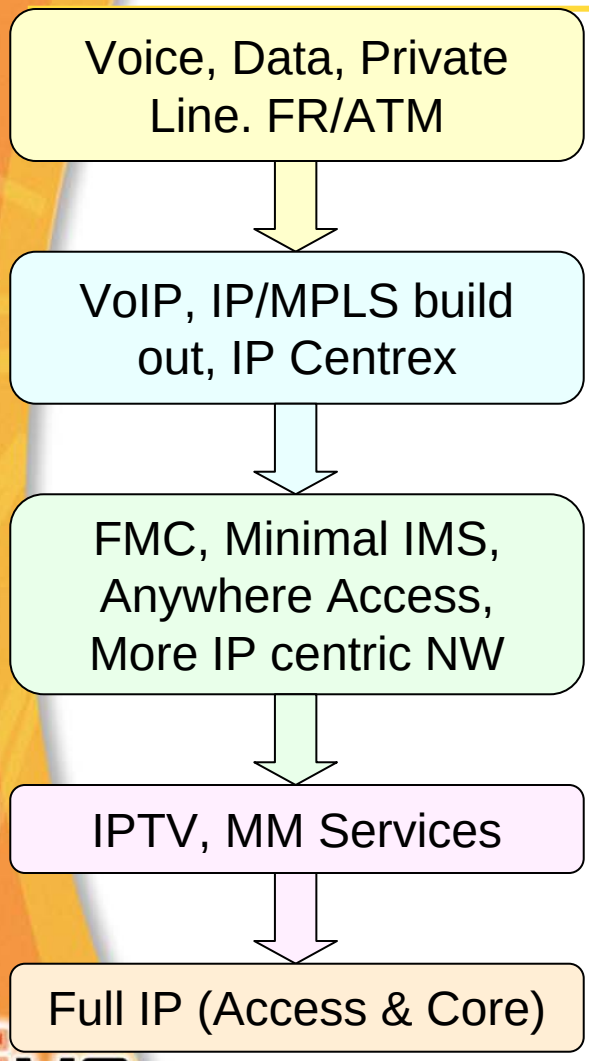

1. The first step in the migration will be to cap the growth of the NW for traditional services like FR & ATM.
2. Transition those to an IP/MPLS core using Pseudo wires by starting the build-out of the IP core
3. Start to offer IP Centrex services
4. Deploy Fixed Mobile Convergence
5. IPTV and other Multimedia services will push the growth of the IP network (May need the deployment of VDSL2 that is IP based (IP DSLAMs etc.)
6. Convert lines to VoIP as per the business plan.
7. Move to a full IP core as soon as feasible

References

- 3G PP Specifications http://www.3gpp.org/specs/specs.htm
- 3GPP2, "*All-IP Core Network Multimedia Domain*" *http://www.3gpp2.org/Public_html/Misc/X.P0013-016-0_VV_Due_30_October-2006.pdf*
- http://www.motorola.com/networkoperators/flash/ims-flash.swf
- Gonzalo Camarillo, "The 3G IP Multimedia Subsystem (IMS) Merging the Internet and Cellular Worlds", John-Wiley & Sons, 2004
- "Application Services in an IP Multimedia Subsystem" www.dataconnection.com/inetapps/download/imsapps.pdf

References

- Amit Mukhopadhyay, “IP Multimedia Core Network Subystem” www.ewh.ieee.org/r1/njcoast/events/IMS.ppt
- D Boswarthick, “Helping NGN become a reality” www.etsi.org/ABOUT_ETSI/30_minutes/documents/Sem30-01.ppt
- “IP Multimedia Subsystems (IMS) Functional Architecture, ETSI ES 282 007 V1.1.1 (2006-03)” http://webapp.etsi.org/action/MV/MV20060526/es_282007v010101m.pdf#search='TISPAN%20NGN%20Functional%20Architecture%20release%201‘
- Brough Turner “Fixed Mobile Convergence” http://www.nmscommunications.com/file/WebinarNov05FixedMobileConvergence.pdf

References

- George Kontopidis, “Demystifying IMS” http://www.nmscommunications.com/webinar/webinar071106/WebinarJul06DemystifyingIMS.pdf
- “IMS and SDPs must work together” www.lightreading.com/document.asp?doc_id=85361&WT.svl=news1_1
- Ulf Olsson, “Towards an all IP Vision” http://www.ericsson.com/ericsson/corpinfo/publications/review/2005_01/016.shtml
- Karim El Malki, “Mobile Multimedia Opportunities (IMS) and IPv6-IPv4 Interworking” www.sicta.ch/files/pdf134.pdf?4593
- “Diameter Session Initiation Protocol (SIP) Application” http://people.nokia.net/~miguel/drafts/pre/pre-draft-ietf-aaa-diameter-sip-app-12.txt

Interfaces and Protocols

Interface	IMS Elements	Protocol	Usage
Cx	S/I-CSCF, HSS	DIAMETER	S/I-CSCF to HSS message exchange
Dh	SIP AS, OSA SCF, IM-SSF, HSS	DIAMETER	Used by an AS to locate the correct HSS
Dx	S/I-CSCF, SLF	DIAMETER	S/I-CSCF query to SLF for locating the correct HSS
Gi	GGSN	GGSN	
Gm	UE, P-CSCF	SIP	UE to CSCF message exchange
Go	PDF, GGSN	COPS	
Gq	P-CSCF, PDF	DIAMETER	
ISC	S/I-CSCF, AS	SIP	CSCF to AS communication
Mg	MGCF, I-CSCF	SIP	ISUP to SIP conversion between MGCF and the I-CSCF
Mi	BGCF, S-CSCF	SIP	S-CSCF to BGCF message interchange
Mj	BGCF, MGCF	SIP	Between the BGCF and MGCF on the same IMS network.

Interfaces and Protocols

Interface	IMS Elements	Protocol	Usage
Mm	S/I-CSCF, IP NW	None	IMS network to External IP network communication
Mn	MGCF, IM-MGW	H.248/MeGaCo	MGCF control of one or more MGW
Mp	MRFC, MRFP	H.248/MeGaCo	MRFC control of the MRFP
Mr	S-CSCF, MRFC	SIP	S-CSCF to MRFC communication
Mw	S/I/P-CSCF	SIP	Inter CSCF communication
Sh	SIP AS, OSA SCS, HSS	DIAMETER	Information exchange between SIP-AS/OSA SCS and the HSS
Si	IM-SSF, HSS	MAP	Communication between HSS and IM-SSF
Ut	UE, SIP AS, OSA SCS, IM-SSF	HTTP	UE Service related data.

Glossary

- 1 x EV-DO 1x Evolution-Data Optimized
- 2G Second Generation Technology (GSM, iDEN etc.)
- 3G Third Generation Technology (UMTS, 1x EV-DO etc.)
- 3GPP Third generation Partnership Program (GSM based)
- 3GPP2 Third generation Partnership Program 2(CDMA based)
- AMR Adaptive Multi-rate (Codec)
- AS Application Server
- ATIS Alliance for Telecommunications Industry Solutions
- ATM Asynchronous Transfer Mode
- BICC Bearer Independent Call Control

Glossary

- BG(F) Border Gateway (Function)
- BGCF Breakout Gateway Control Function
- CAMEL Customized Application Mobile Enhanced Logic
- CAP CAMEL Application Part
- CCF Charging Control Function
- CDR Call Detail Record
- CGF Charging gateway Function
- CODEC CODer-DECoder
- CS Circuit Switching
- CSF Connected Services Framework

Glossary

- CSCF Call Session Control Function
- CSE CAMEL Service Environment
- DHCP Dynamic Host Configuration Protocol
- DNS Domain Name System
- DSLAM Digital Subscriber Loop Access Multiplexer
- ENUM E.164 Number
- EIR Equipment Identity Registry
- ETSI European Telecommunications Standards Institute
- FMCA Fixed Mobile Convergence Alliance
- FR Frame Relay

Glossary

- FTTN Fiber to the Node
- FTTP/B/H Fiber to the Premises/Building/Home
- GGSN Gateway GPRS Support Node
- GMLC Gateway Mobile Location Centre
- GUP Generic User Profile
- HLR Home Location Registry
- HSS Home Subscriber Server
- I-BCF Inter-Connect Border Control Function
- I-BGF Inter-Connect BGF
- I-CSCF Interrogating-CSCF

Glossary

- IETF Internet Engineering Task Force
- IMS-ALG IMS Application Level Gateway
- IMSI International Mobile Subscriber Identifier
- IPv4/v6 Internet Protocol version 4/version 6
- ISP Internet Service Provider
- ISUP ISDN User Part
- ITU-T International Telecommunications Union- Telecom Std
- IWF Inter working Function
- MAP Mobile Application Part
- MGCF Media Gateway Control Function

Glossary

- MGF Media Gateway Function
- MMD Multimedia Domain
- MRF –C/P Media Resource Function-Controller/Processor MPLS Multi Protocol Label Switching
- MVNO Mobile Virtual Network Operator
- NAI Network Access Identifier
- NAT-PT Network Address Translation-Protocol Translation
- OSA Open Services Architecture
- P-CSCF Proxy-CSCF
- PDF Policy Decision Function

Glossary

- PDN Packet Data Network
- PDP Packet Data Protocol
- PEF Policy Enforcement Function
- PLMN Public Land Mobile Network
- PSTN Public Switched Telephone Network
- QoS Quality of Service
- RACS Resource and Admission Control Subsystem
- RADIUS Remote Authentication Dial In User Service
- RTP Real Time Transport Protocol
- RTCP Real Time Control Protocol

Glossary

- SCS Service Capability Server
- S-CSCF Serving-CSCF
- SCIM Service Capability Interaction Manager
- SDP Session Descriptor Protocol
- SDP Service Delivery Platform
- SEG Security gateway
- SGSN Serving GPRS Support Node
- SLF Subscription Locator Function
- SSF Service Switching Function SGW Signaling Gateway
- SGF Signaling Gateway Function

Glossary

- SIM Subscriber Identity Module
- SIP/SIP-T Session Initiation Protocol/SIP-for Telephony SIP-S SIP Secure
- SRTP Secure Real Time Prptocol
- SSL Secure Socket Layer SS7 Signaling System 7
- Tr-GW Translation Gateway
- THIG Topology Hiding Inter-network Gateway
- TLS Transport Level Security
- T-MGF Transport Media Gateway Function
- UE User Equipment

Glossary

- UMTS Universal Mobile Telecommunications System
- UTRAN UMTS Radio Access Network
- VDSL2 Very High Data Rate Subscriber Loop2